6

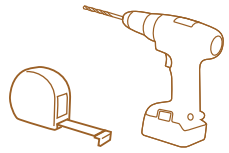

ASSEMBLE BALUSTER SECTION

- Attach a Mounting Bracket to one side of the Top Support Rail (outlined in Step 3), this will be attached to the 6" Post.
- On the side that will run over the 4" Post Sleeve, pre-drill the Top Support Rail with two holes using a 3/16" drill bit at a 10-15 degree angle. These holes should be separated by about 1/2" and should start 1" away from the end of the rail.

For 10' rail sections utilizing aluminum support rail, when attaching Mounting Brackets at each end of the Top Support Rail, pre-drill using a 9/64" drill bit (instead of 7/64" bit).

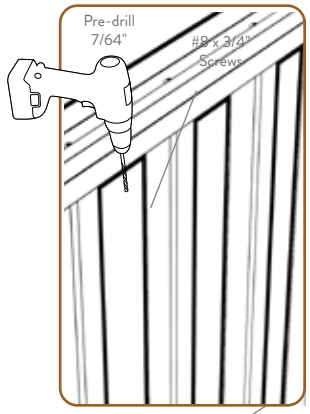

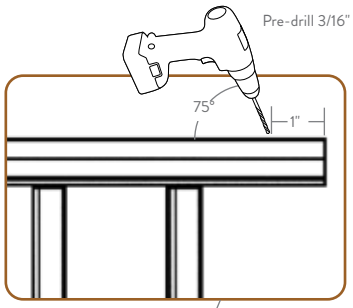

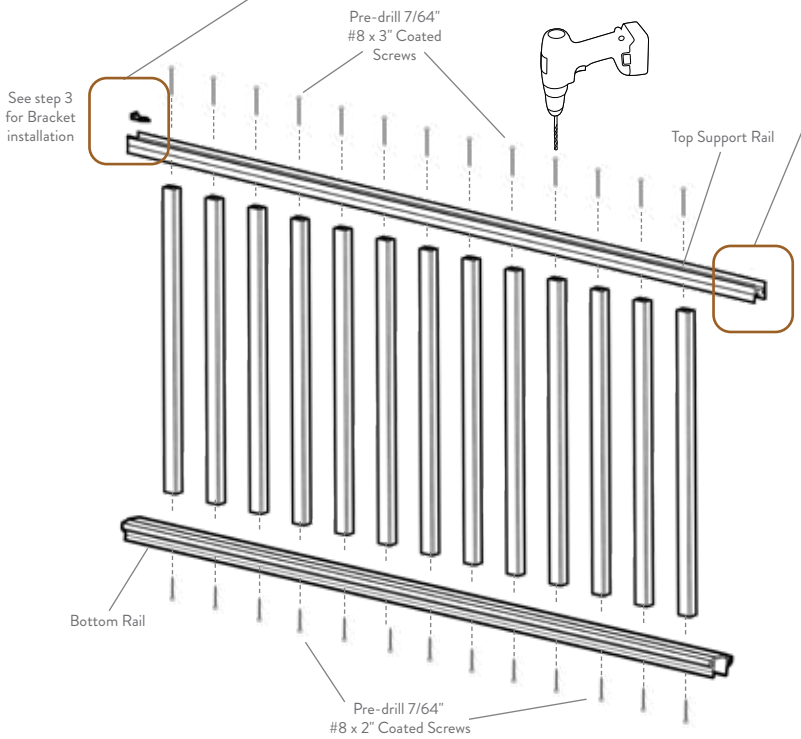

7

INSTALL RAIL ASSEMBLY

- Align Top Support Rail to center of Posts.
- Use the 3" Green Screws, provided in the Universal Hardware Kit to fasten the Top Support Rail to the 4"x4" post.
- The top of the 4"x4" post, 4" Post Sleeve, and the bottom of the Support Rail should line up to the same height. Test fit railing prior to making final cuts on 4"x4" post and 4" Post Sleeve to ensure these heights are aligned.

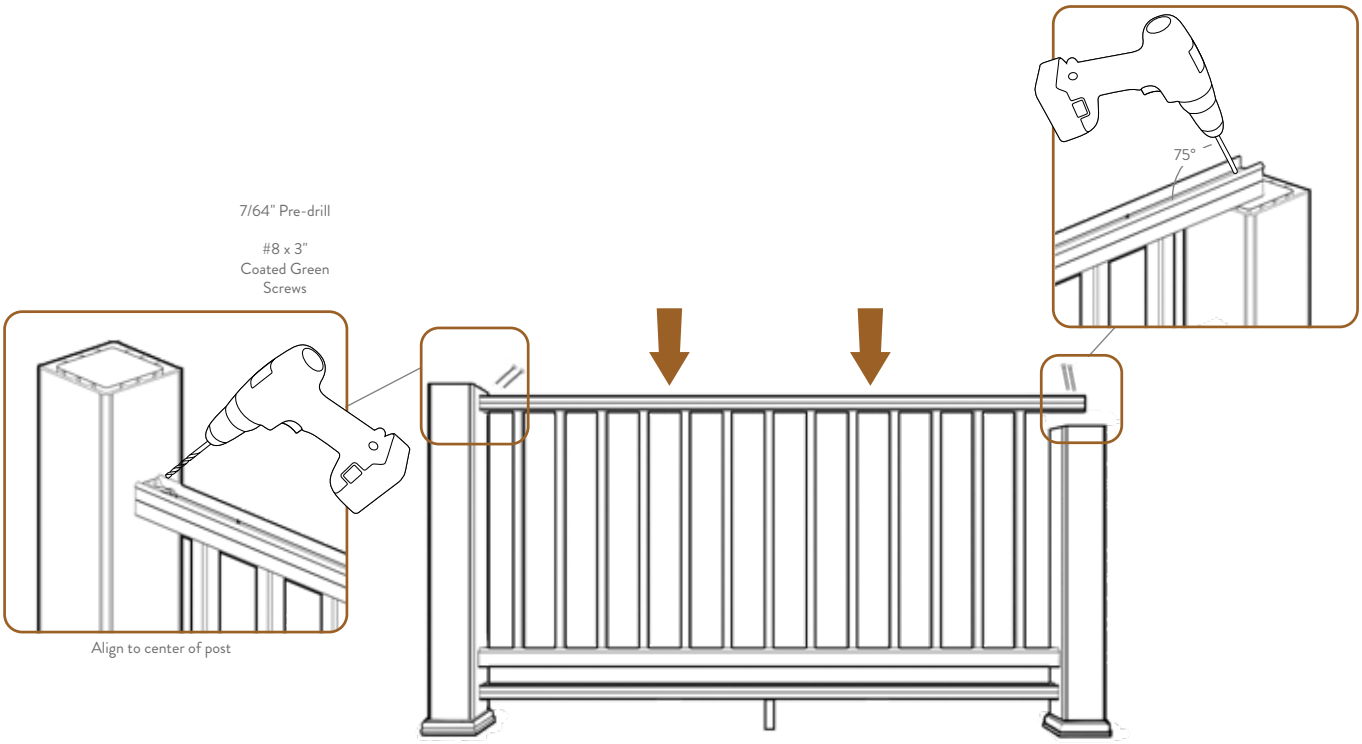

8

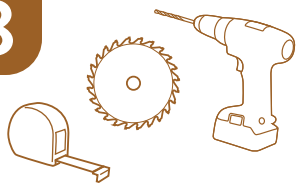

INSTALL TOP RAIL AND POST CAP

- Measure and cut the Top Rail to length. Trim both ends for a clean cut.
- Attach Post Cap using exterior grade caulk applied to the underside of the Cap.

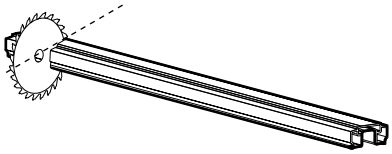

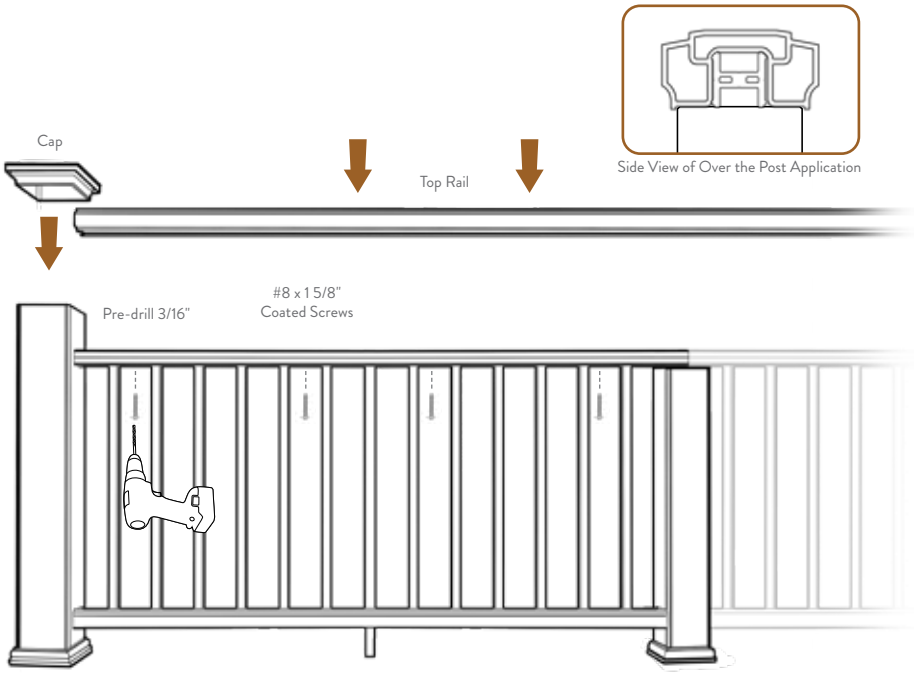

Caution: Screws must be 1 5/8" so they won't go through the Top Rail on straight rail sections.

NOTES

TimberTech
by AZEK Building Products

THE AZEK COMPANY

AZEK Building Products
1330 W Fulton Market, Suite #350
Chicago, IL 60607

©2020 AZEK Building Products. All Rights Reserved.

TimberTech.com